SPECIFICATION APPLIED

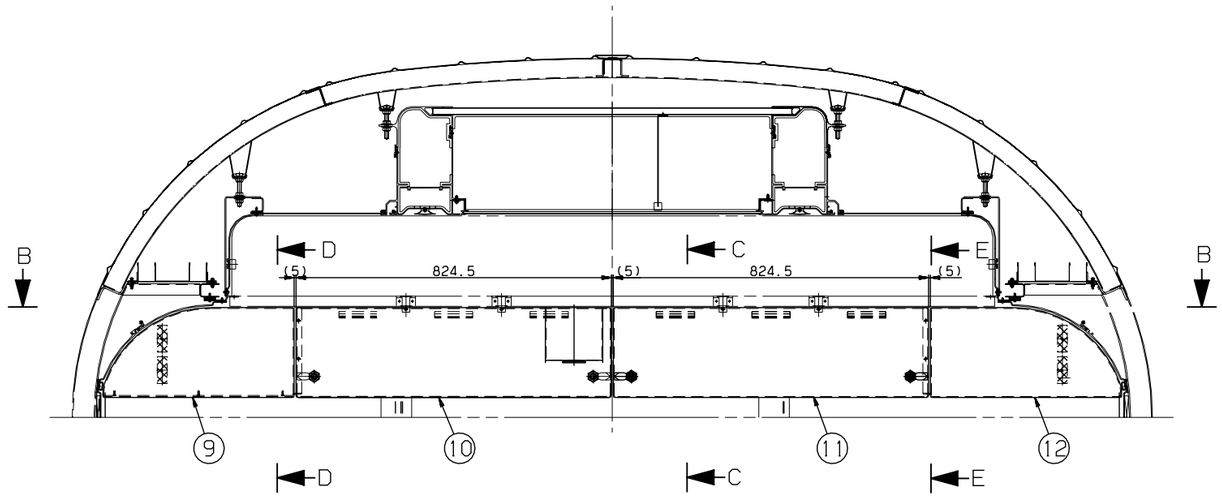

VIEW A-A

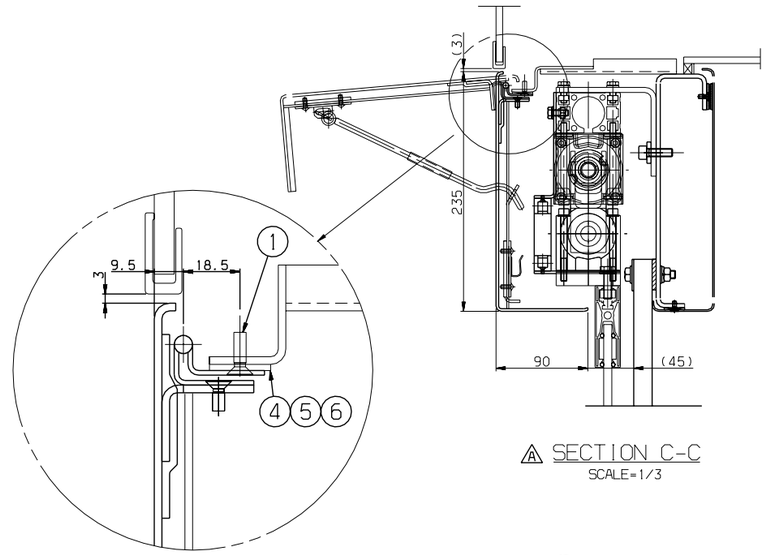

A SECTION C-C
SCALE=1/3

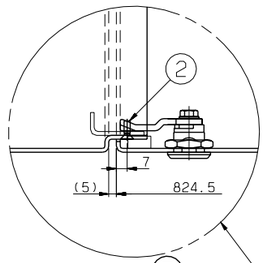

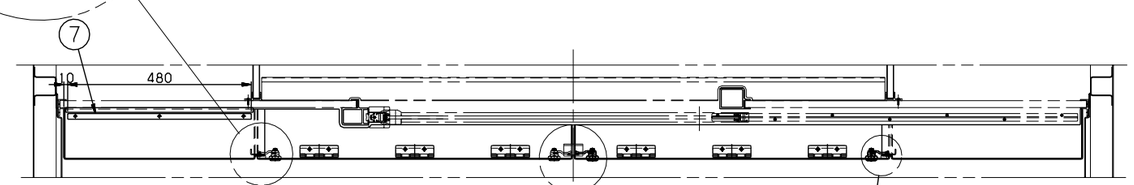

VIEW B-B

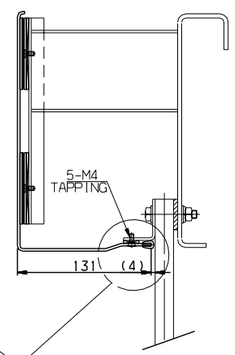

SECTION D-D
SCALE=1/3

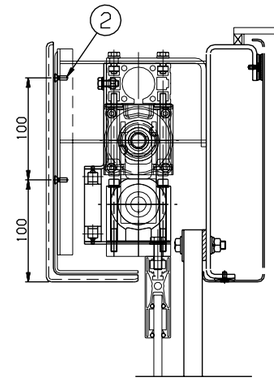

SECTION E-E
SCALE=1/3

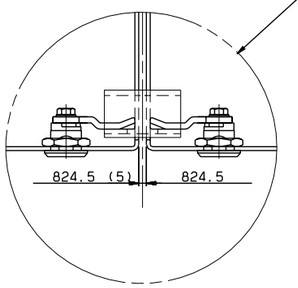

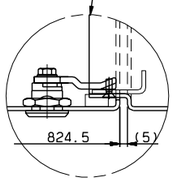

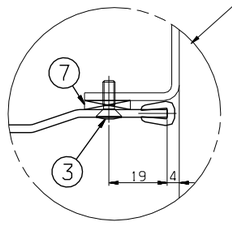

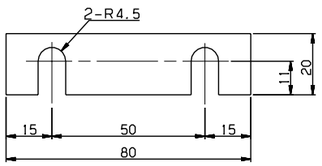

DETAIL #4,5,6
SCALE=1/1

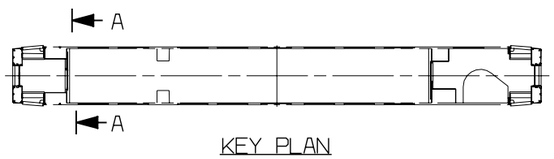

KEY PLAN

NOTE
1. OPENING THE COVER, IT SHALL BE ON INTERFERENCE.
2. THE TOLERANCE OF CAR WIDTH SHALL BE ABSORBED BY THE GAP BETWEEN COVERS.
3. PART 4,5 AND 6 SHALL BE CUT ACCORDING TO THE WORK CONDITION.
4. PART 1 SHALL BE APPLIED WITH LOCTITE 222.

품번 NO.	부품 번호 PART NO.	품명 DESCRIPTION	재질 MATERIAL	수량 Q'TY	중량 W.T	비고 REMARKS
A 13	~~RFD3001~~2AN0	~~DOOR, MODE SWITCH~~	~~ASSY~~	~~1~~		
12	RFP55077AN0	COVER, INSIDE, TYPE F	ASSY	1		
11	RFP55022AN0	COVER, INSIDE, TYPE C	ASSY	1		
10	RFP55076AN0	COVER, INSIDE, TYPE E	ASSY	1		
9	RFP55020AN0	COVER, INSIDE, TYPE A	ASSY	1		
A ~~8~~	~~RFP55073AN0-008~~	~~PACKING~~	~~NEOPRENE RUBBER~~	~~1~~		~~T3X15X50~~
7	RFP55073AN0-007	PACKING	NEOPRENE RUBBER	1		T3X15X480
6	RFP55073AN0-006	PACKING	NEOPRENE RUBBER (HARD BOARD)	6		T3X20
A 5	RFP55073AN0-005	PACKING	NEOPRENE RUBBER (HARD BOARD)	6		T2X20
4	RFP55073AN0-004	PACKING	NEOPRENE RUBBER (HARD BOARD)	6		T1X20
3	RS60609-097S	SCREW O.H	SUS304	3/4		M4X12
2	RS60607-097S	SCREW F.H	SUS304	4		M4X12
A 1	RS60607-098S ~~RS60607-097S~~	SCREW F.H	SUS304	12		M4X14 ~~M4X12~~

승인 APP	H.G.RYU 2009.05.01	재질 MAT'L	ASSY
검도 CHK	H.S.KIM 2009.05.01	중량 G.W	
설계 DGN	Y.D.KIM 2009.04.30	일반공차 MC	B
제도 DRG	S.H.SONG 2009.04.30	VD	B
		CT	B
		SIZE	A1

TITLE: COVER, INSIDE, FITTING 2

도면 번호 DRG. NO: RFP55073AN0 MS | Ver. 00 | Rev. -A

SCALE 1/8 | 매수 SHEET 1 of 1

참고문헌 REF. NO. FPP08363

HYUNDAI Rotem 현대로템주식회사

3D5101 | RFP- | 넌-PRJT | 설리본솔 | CATIA

기호 MARK	일자 DATE	변경 내역 DETAIL OF REVISION(E.C ZONE)	설변번호 E.C NO.	설계 DGN	검도 CHK	승인 APP
AX5	2009.07.15	CHANGED DOOR &REMOVAL FRAME.	3D5101-U060	Y.D.KIM	H.S.KIM	H.G.RYU

기호 MARK	일자 DATE	변경 내역 DETAIL OF REVISION(E.C ZONE)	설변번호 E.C NO.	설계 DGN	검도 CHK	승인 APP

치수구분		A	B
주조, 주강품 CASTING (±)			
	~20M	8	14
	~15M	7	12
	~12M	6	10
	~8M	5	8
	~4M	4	6
	~2M	3	4
	~1M	2	3
	~315	1	2
	~120	1	2
	~30	1	1

치수구분		A	B	C
용접 구조물 WELDING (±)				
	~20M	-	6.0	8.0
	~15M	-	5.0	7.0
	~12M	-	4.0	6.0
	~8M	-	3.0	5.0
	~4M	0.8	2.0	4.0
	~2M	0.5	1.2	3.0
	~1M	0.3	0.8	2.0
	~315	0.2	0.5	1.2
	~120	0.15	0.3	0.8
	~30	0.1	0.2	0.5
	3~6	0.05	0.1	0.2

치수구분		A	B	C
기계 가공품 MACHINING (±)				
규정사항없음 일반공차표 GENERAL TOLERANCE				
	~6	2	4	
	~30	2	3	
	~10	1	1.5	
	< 3	0.5	1	
	~3150	-	7	
	~1600	4	5	
	~800	3	4	
	~400	2	3	
	~200	1.5	2	
	~100	1	1.5	

본 도면은 당사 재산권과 기밀이 함축되어 있으며 무단복사/배포 금지됨. PROPERTY OF ISSUING ENTITY, CANNOT BE DISTRIBUTED OR REPRODUCED WITHOUT AUTHORIZATION.